Boost up Your Certification Score

IBM
C1000-179
IBM Fundamentals of Quantum Computing Using Qiskit v2.X Developer

For More Information – Visit link below:

https://www.examsboost.com/

Product Version

✓ Up to Date products, reliable and verified.
✓ Questions and Answers in PDF Format.

Latest Version: 6.0

Question: 1

A circuit prepares the single-qubit state $e^{(i\pi/3)}|0\rangle$ and then measures in the computational basis. What is the probability of obtaining the outcome 0?
Response:

A. 0.5
B. 0.0
C. 1.0
D. It depends on the value of the phase $e^{(i\pi/3)}$

Answer: C

Explanation:
A global phase factor has magnitude 1 and is unobservable; $|e^{(i\pi/3)}|^2 = 1$, so the state is measured as 0 with certainty.

Question: 2

Which method is used to add a barrier across all qubits in a QuantumCircuit object qc?
Response:

A. qc.barrier()
B. qc.stop()
C. qc.wait()
D. qc.add_barrier()

Answer: A

Explanation:
Calling barrier() with no arguments applies a barrier across all qubits in the circuit.

Question: 3

In OpenQASM 3, which keyword is used to declare a classical floating-point variable?
Response:

A. float
B. double
C. real
D. decimal

Visit us at: https://www.examsboost.com/test/c1000-179

Answer: A

Explanation:
OpenQASM 3 declares real values with the float type, for example float[64] x;.

Question: 4

Which Estimator option should be increased to enable advanced techniques like Zero Noise Extrapolation (ZNE)?
Response:

A. resilience_level
B. optimization_level
C. execution_priority
D. shots_count

Answer: A

Explanation:
Raising the resilience_level turns on stronger error-mitigation methods such as ZNE for expectation values.

Question: 5

Which method adds a controlled-Z gate between qubit 0 and qubit 1?
Response:

A. qc.cz(0, 1)
B. qc.control_z(0, 1)
C. qc.z_ctrl(0, 1)
D. qc.ccz(0, 1)

Answer: A

Explanation:
cz() appends a controlled-Z using the given control and target qubits.

Question: 6

In Qiskit v2.x, which class is used to create a dynamic circuit that allows real-time feedback and control flow?
Response:

A. QuantumCircuit

B. DynamicCircuit
C. ConditionalCircuit
D. AdaptiveCircuit

Answer: A

Explanation:
Dynamic circuits are built with the standard QuantumCircuit using mid-circuit measurement and control-flow constructs such as if_test.

Question: 7

Which plot_bloch_multivector feature allows seeing the state of individual qubits in a multi-qubit system?
Response:

A. It plots a sphere for each qubit.
B. It plots one sphere with many arrows.
C. It plots a 2D projection of the state.
D. It colors the sphere based on parity.

Answer: A

Explanation:
plot_bloch_multivector draws one Bloch sphere per qubit, showing each qubit's reduced single-qubit state.

Question: 8

A single Sampler PUB carries a circuit with two parameters and a parameter_values array of shape (3, 4, 2).
What is the shape of this PUB's result data?
Response:

A. (3, 4, 2)
B. (12,)
C. (3, 4)
D. (2,)

Answer: C

Explanation:
The final axis (size 2) binds the two parameters, leaving the leading grid (3, 4) as the result shape — twelve distributions arranged in a 3-by-4 array.

Visit us at: https://www.examsboost.com/test/c1000-179

Question: 9

A backend exposes a basis gate set of {'rz', 'sx', 'x', 'cx'} and a specific coupling map. A circuit containing an h gate and a long-range cx is transpiled to this backend. What must the transpiler do?
Response:

A. Leave the h gate as-is because Hadamard is universal.
B. Reject the circuit, since h and a long-range cx are not directly supported.
C. Decompose the h into the basis gates and insert SWAPs (routing) so every cx acts on connected qubits.
D. Convert every gate into a single custom unitary and run that directly.

Answer: C

Explanation:
Transpilation performs basis translation (h → rz/sx) and routing (adding SWAPs) so the circuit conforms to both the basis gates and the coupling map.

Question: 10

Which visualization shows the probability of each computational basis state as a vertical bar?
Response:

A. plot_histogram()
B. plot_bloch_vector()
C. plot_state_city()
D. plot_gate_map()

Answer: A

Explanation:
plot_histogram draws each basis state's probability (or counts) as a vertical bar.

Question: 11

Which one of the following images is the output from the code below?

```
from qiskit import *
qubits = QuantumRegister(2)
clbits = ClassicalRegister(2)
circuit = QuantumCircuit(qubits, clbits)
(q0, q1) = qubits
(c0, c1) = clbits
circuit.h(q0)
```

```
circuit.measure(q0, c0)
with circuit.if_test((c0, 1)) as else_: circuit.h(q1)
with else_: circuit.x(q1)
circuit.measure(q1, c1)
circuit.draw(output="mpl")
```

Response:

A.

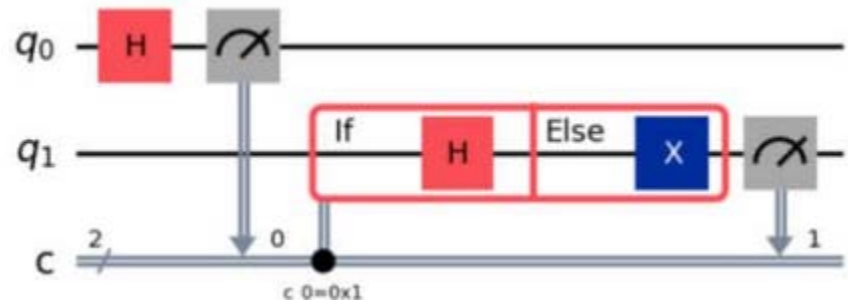

B.

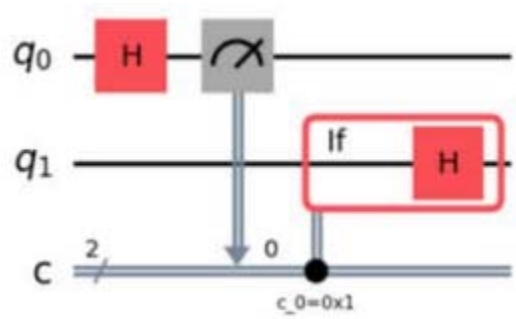

C.

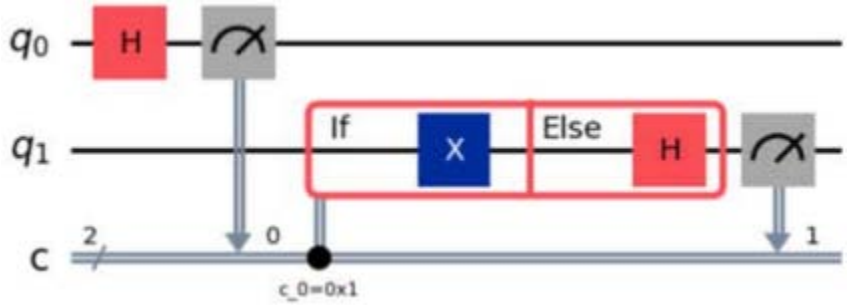

D.

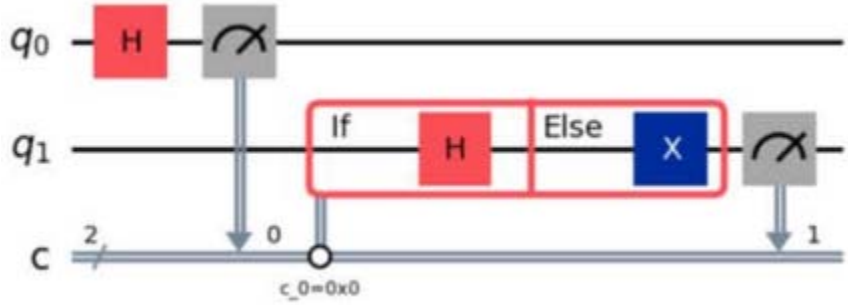

Visit us at: https://www.examsboost.com/test/c1000-179

Answer: A

Explanation:
The If block applies H to q1 when c0 equals 1 and the Else applies X, the condition reads c0=0x1, and q1 is measured afterward, exactly as the code defines.

Question: 12

Given the code fragment below, which image is the expected output?

```
from qiskit.quantum_info import Statevector
from qiskit.visualization import plot_histogram
state = Statevector([0.+0.j, 0.+0.j, 0.70710678+0.j, 0.+0.j, 0.+0.j, -0.70710678+0.j, 0.+0.j, 0.+0.j])
counts = state.sample_counts(shots=1024)
plot_histogram(counts)
```

Response:

A.

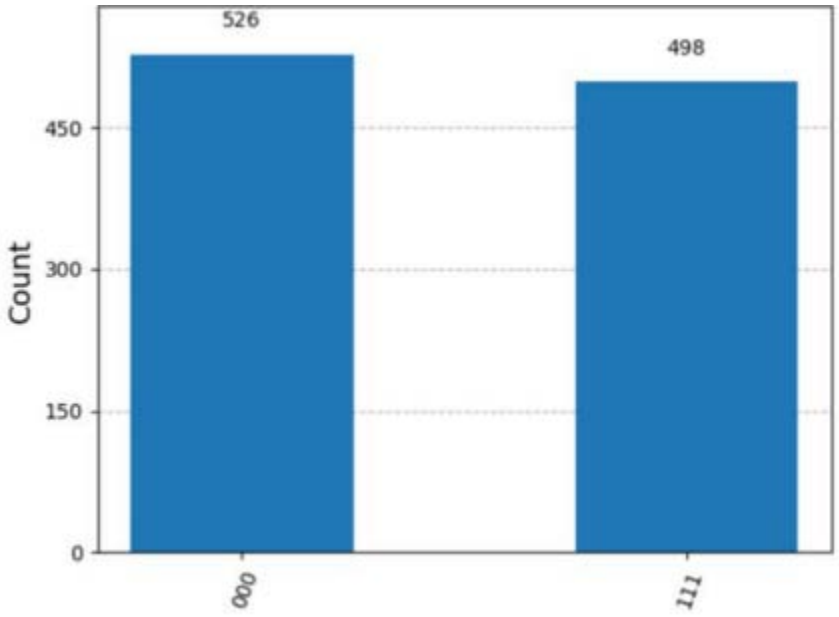

B.

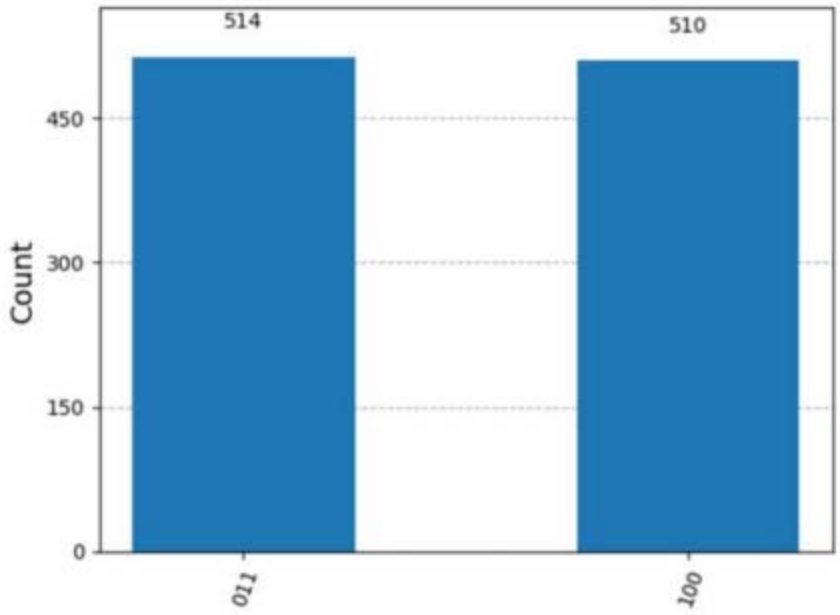
514
510
450
300
150
0
Count
011
100

C.

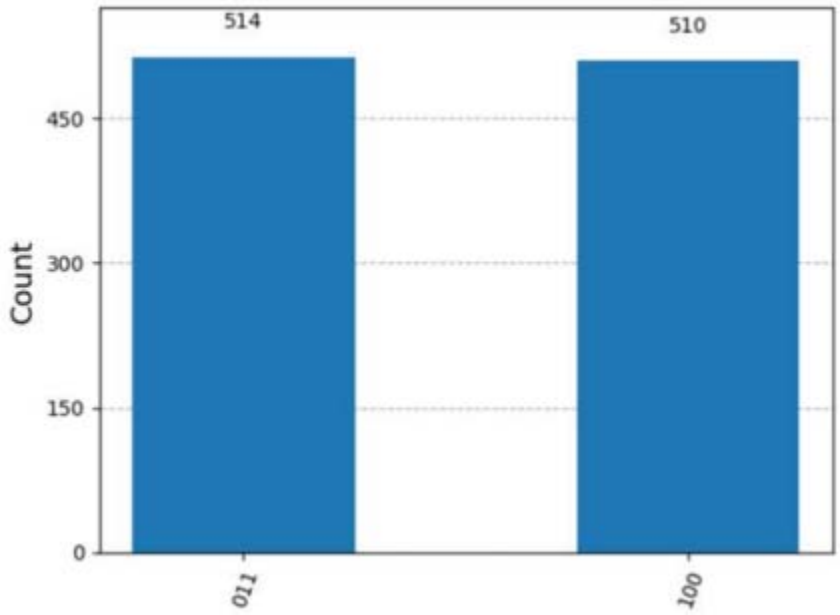
514
510
450
300
150
0
Count
011
100

D.

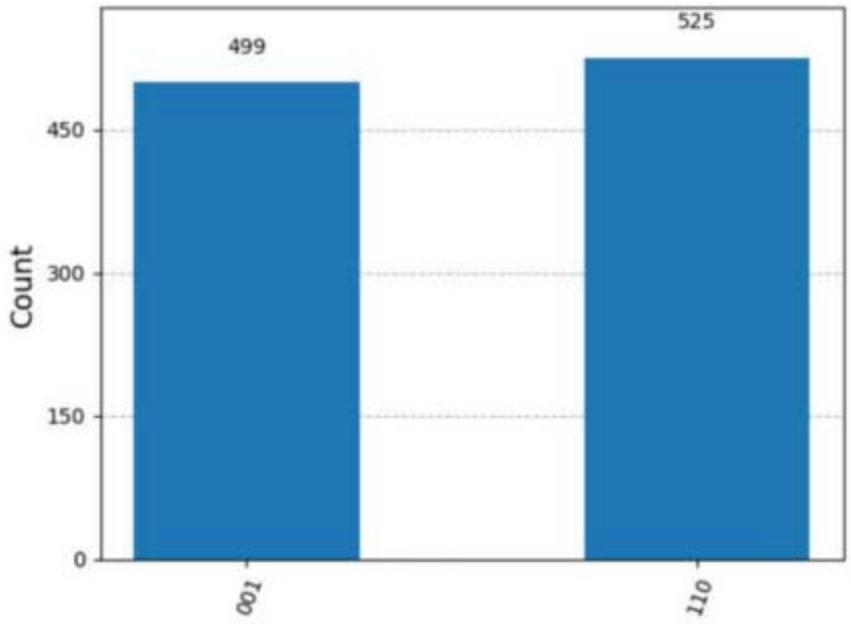

Answer: C

Explanation:
Only indices 2 and 5 have nonzero amplitude (magnitude 0.707, so probability 0.5 each), which sample to the basis states '010' and '101' with roughly equal counts; the sign on index 5 does not affect probability.

Thank You for Trying Our Product

For More Information – Visit link below:

https://www.examsboost.com/

15 USD Discount Coupon Code:

G74JA8UF

FEATURES

- ✓ 90 Days Free Updates
- ✓ Money Back Pass Guarantee
- ✓ Instant Download or Email Attachment
- ✓ 24/7 Live Chat Support
- ✓ PDF file could be used at any Platform
- ✓ 50,000 Happy Customer